Assessment of Vehicles and Equipment

Used in Operations and Maintenance of

Sanitation Systems in Odisha

Prepared by:
Urban Management Centre
In association with Saniverse Environmental Solutions

September 2022

Urban Management Centre

Acknowledgement

We would like to thank Mr G. Mathivathanan, IAS, Principal Secretary, Housing & Urban Development Department (H&UDD), for his continued support in undertaking this study. We also thank Mr Kalyan Kumar Rath, Additional Secretary, H&UDD, for his constant guidance.

We thank the officials of Bhubaneshwar and Cuttack Municipal Corporation, Puri Municipality and WATCO offices, private sanitation service operators, and the sanitation workers for their whole-hearted support and active participation. We also acknowledge the technical support of Saniverse Environmental Solutions in conducting field studies.

We would also like to acknowledge the field team of the Urban Management Centre (UMC) – Ms Rashmita Patel, Ms Soumya Mishra, Mr Ganesh Parida, Mr Soumya Darshan Mohanty, Mr Ramachandra Samal, and Mr Alok Kumar Mahapatra. Technical assistance for drafting this report was provided by Manvita Baradi, Meghna Malhotra, Jay Shah, and Prerana Somani from the UMC; and Mr Aditya Bhedasgaonkar, Mr Prajwal More, and Mr Dhawal Patil from the Saniverse Environmental Solutions.

Disclaimer

It should also be noted that the solution provided in this report may be limited to a particular geographical region. The scope of this report is limited to desk research and site visits conducted for the project. There may exist other equipment/machinery that can perform similar operations and may not have been included in this report.

Table of Contents

List of Figures

List of Tables

Acronyms

CapEx	Capital Expenditure
ERSU	Emergency Response Sanitation Unit
FSSM	Faecal Sludge and Septage Management
GeM	Government e-Marketplace
GPM	Gallons per minute
HP	Horsepower
HR	Human Resources
OEM	Original Equipment Manufacturers
OpEx	Operating Expenses
PPE	Personal Protective Equipment
SOP	Standard Operating Procedure
TSU	Technical Support Unit
ULB	Urban Local Body
UMC	Urban Management Centre

1. Introduction

Sanitation infrastructure requires regular cleaning and maintenance to prevent blockages, choking, or overflow of the systems, and to keep it functioning smoothly. Often, untrained sanitation workers are engaged, with no access to safety devices or personal protective equipment (PPE), instead of buying appropriate machines for operations and maintenance of sanitation appurtenances. However, manual cleaning of sewer lines, septic tanks, or open drains is not only time-consuming but also involves high safety risks for the workers involved.

In India, the National Commission for Safai Karamcharis (NCSK) recorded the death of 920 sanitation workers between 1993 and January 2020, due to manual scavenging, including the hazardous cleaning of maintenance holes or septic tanks. Moreover, since many of these incidents go unreported, the actual number of fatalities is estimated to be much high. To ensure the safety of sanitation workers and eliminate preventable deaths, the Prohibition of Engagement as Manual Scavengers and their Rehabilitation Act, 2013 (PEMSRA, 2013) of the Government of India (GoI) mandates mechanical cleaning of maintenance holes and septic tanks. Thereafter, the Ministry of Housing and Urban Affairs (MoHUA) launched the Emergency Response Sanitation Unit advisory (2019) and the Safaimitra Suraksha Challenge (2020–21) to incentivize the procurement of the machines and equipment required for cleaning sanitation infrastructure.

The Government of Odisha launched the pioneer GARIMA scheme in 2020 – for the safety and dignity of sanitation workers. Many cities have procured vehicles and machines to carry out the mechanical cleaning of sanitation systems. To understand the functionality and performance of the equipment procured, a team from the Urban Management Centre and Saniverse conducted field visits to three cities – Bhubaneswar, Cuttack, and Puri – from 25 April to 28 April 2022. The fieldwork aimed at studying the current mechanized operations and identifying the scope for augmenting/ modifying the vehicles and/or equipment – to not only increase their efficiency but also make them worker-friendly by improving ease of use and eliminating contact with faecal matter. The team also visited the Indore Municipal Corporation, Chandigarh Municipal Corporation and Surat Municipal Corporation declared the top-performing cities in the Safaimitra Suraksha Challenge by MoHUA, to understand the various mechanization innovations made and initiatives undertaken.

This report presents an in-depth observation of the operations, with insights into the suitability of the equipment in various conditions, as well as the associated limitations and potential issues. Based on these, it makes recommendations to enhance the efficiency of the processes, lists alternative equipment where relevant, and suggests modifications to make the machines more efficient. The final part of the report contains a decision matrix, where the efficiency of all the equipment is compared based on various site conditions. This serves as a tool for city officials in identifying the most appropriate machines for procurement based on local requirements and challenges.

2. Need for Assessment of Mechanized Cleaning of Sanitation Systems

Cities in India have been increasingly procuring machines for the cleaning of drains, sewer lines, and septic tanks – to adhere to the PEMSRA, 2013 and modernize the operation and maintenance (O&M) of India's sanitation infrastructure. However, due to the vast differences in topological conditions, age, and design of sanitation systems, as well as the varying capacity of operators, the effectiveness of mechanized cleaning of sanitation systems often falls short of expectations. This can be attributed largely to the choice of vehicles and equipment used for addressing the problems.

An evaluation of the vehicles and equipment can provide insights into the functioning of the machines (operational capacity, limitations), the level of training and competence required among workers operating them, and the extent to which cities have been able to mechanize cleaning and reduce manual intervention. This assessment helps determine the scope of upgrading mechanical cleaning operations to ensure safety in sanitation systems where some amount of manual intervention may still be needed.

3. Methodology for Assessment of Mechanized Cleaning of Sanitation Systems

Various vehicles and equipment are being used for cleaning and maintaining sanitation systems across cities in India. The team conducted field visits in the cities of Puri, Bhubaneswar and Cuttack, to assess the machines used in cleaning sewer lines, septic tanks, and open drains. The team observed the cleaning operations in progress to assess the effectiveness and challenges of using the machines and equipment, and interacted with the workers operating the machines, their supervisors (either private contractors or officials from the ULB/ parastatal agencies) and senior officials from ULB and parastatal agencies involved in procurement of the machines to conduct semi-structured interviews.

Observations were recorded in the following areas:

i. Parking/Storage Area: Ease of parking the machine, space required for parking, ease of driving/ carrying the machines to the cleaning site.
ii. At the Site: Ease of reaching the cleaning area, extent to which cleaning is achieved, contact of sanitation workers with faecal matter during and immediately after the operation of the machines/equipment.

The visits shed light on the operational and behavioural challenges in operating vehicles and equipment to clean sanitation systems. In the following sections, the report details in-depth observations of all the equipment and machines used in the cities and recommends ways to make the mechanized cleaning process safer and more efficient.

4. Cleaning of Sewer Lines

A common problem in Indian cities is that sewer lines get blocked due to the illegal dumping of waste in maintenance holes. Such waste often contains problematic items, including cloth material, gunny bag, and construction debris. Thus, blockage removal and desilting of sewer lines are critical to ensuring the efficient operation of the sewer system.

4.1. Existing Equipment for Cleaning of Sewer Lines

4.1.1. Jetting Cum Suction Machine

A “jetting cum suction machine” combines high-pressure sewer jetting and suction operations.

Application

The operation begins by inserting the suction pipe of the machine into the maintenance hole, to suck out the liquid sludge. Then, the nozzle is inserted into the sewer line to begin the jetting operation. The nozzle releases a high-pressure water jet to clear the hardened sludge, breaking it

down into smaller pieces, which are then sucked out easily. This machine is suitable for operating in sewers with a diameter of 200 to 600 mm, and depth of up to 7 m.

Figure 1. Desilting of sewers using suction cum jetting machine

CapEx and OpEx

The cost of jetting cum suction machines varies significantly based on capacity. A truck-mounted jetting cum suction machine starts at around Rs 28 lakh and increases with the increasing capacity of the water tank. A trailer-mounted jetting cum suction machine is relatively less expensive. Depending on the usage, the annual operational cost can range from 5 per cent to 15 per cent of its capital cost.

Adaptability and Effectiveness

The jetting cum suction machine is commonly used for cleaning maintenance holes. It gives the best result for unclogging sewer lines by clearing silt and blockages. The machine is available in various capacities and sizes.

Field Observations and Challenges

- Due to the large size of the vehicle, accessing maintenance holes in narrow lanes can be difficult. Jetting cum suction machines of smaller capacity can be procured for accessing narrow lanes.
- Jetting cum suction machines don’t come with an inbuilt nozzle guiding mechanism, which minimizes the operator's control over the movement of the nozzle. Consequently, the nozzle often gets stuck either in cracks or between pipes, due to level differences.
- The lack of a guidance system also results in the nozzle sometimes getting stuck in the blockages. In such situations, extracting the nozzle is a challenge and can lead to increased wear and tear.
- Materials such as gunny bags and mattresses are difficult to remove using jetting cum suction machines.
- If a machine breaks down, it remains idle until spare parts become available locally; sometimes, operators have to wait for a month or two to receive the spare parts and repair the machine.

- Since the jetting machine is usually used to desilt sewer lines, the truck has to carry water in the tank. In cases where the sludge has hardened, the water tank requires frequent refilling, which necessitates multiple trips to the water-filling station at the workshop/garage to finish the work.
- The sanitation workers operating the machines have to manually lift the heavy maintenance hole covers, which causes ergonomic discomfort as well as the risk of physical injuries, in case the cover falls on the legs.
- The cleaning of one maintenance hole often requires opening adjacent maintenance holes in the same stretch of the sewer line. However, cleaning teams are usually not allocated an adequate number of traffic control devices, cones etc., thereby creating a risk of accidents.
- New workers are not provided with formal training; the workers shared that they usually learn to operate the machine on site. Thus, they are not aware of precautionary measures to prevent injuries and machine breakdown.
- Workers are directly exposed to hazardous sewer-line gases while opening the maintenance hole covers.
- The current Emergency Response Sanitation Unit (ERSU) protocol, which requires obtaining permission for the manual entry of individuals into sewers or septic tanks, takes almost two to three days. WATCO officials interviewed during fieldwork shared that this causes delays in emergency situations and impedes the timely resolution of cleaning requests.

4.2. Suggested New Equipment for Cleaning of Sewer Lines

4.2.1. Sewer Croc

A "Sewer Croc"[1] is a robotic inspection cum blockage cutting system developed to disintegrate and flush out blockages in the sewer line. It uses a water jet from jetting machine to spin turbine blades at a very high speed, which cuts through blockages such as roots, bricks, hardened silt, and sediments.[2] The Sewer Croc can also be augmented with an inspection camera for identifying debris, blockages, roots, sediments, etc.; and a display monitor to relay the camera feed. The data can be extracted and reported for reference. The wheels are aligned with stiffness springs to support flexibility (expansion and contraction), making the equipment suitable for sewers of various sizes without damaging the sewer lines.

Issues Addressed

The unique technological combination of a camera with a jet spray cum root cutter solves two challenges faced in operating the jetting cum suction machine. First, it helps guide the nozzle of the jetting machine and prevents it from getting stuck. Second, the turbine blades cut through hardened blockages and clogs in sewer lines of sizes ranging from 200 mm to 2000 mm in diameter.

Application

The Sewer Croc is designed to be operable in sewer lines of different sizes, with varying depths of sedimentation. The Sewer Croc 200 and Sewer Croc 250 are designed for low flow rates, whereas Sewer Croc 300 and Sewer Croc 400 are designed for high flow rates and high-water jet pressure.

Requirement of Human Resources, Training, and PPE

[1] http://www.sanitor.in/SewerCrocandRoboticCameraSystem.html
[2] The cutting blades are at the centre of the turbine, and the turbine is positioned at the centre at the time of the operation.

Table 1 summarizes the human resources required for operating the Sewer Croc and provides the measures for ensuring worker safety.

Table 1. HR, Training, and PPE requirement for operating the Sewer Croc

HR requirement	Training Required	PPE Required
• Operator – 1	• Machine-specific operation • Dos and Don'ts while operating the machine • Hazard awareness and mitigation	• Gloves and an N-95 mask for the operator

CapEx and OpEx

The Sewer Croc costs approximately Rs 8 lakh and comes with pipes of three diameters – 200 mm, 300 mm, and 350 mm – to operate in sewer pipes of different sizes. The cost also includes one set of spare parts and a week-long training for the workers on operating the equipment. Procuring the sewer inspection camera and monitoring screen requires an additional Rs 6 lakh. According to the manufacturer, the annual operational cost is around 10 per cent of the capital cost.

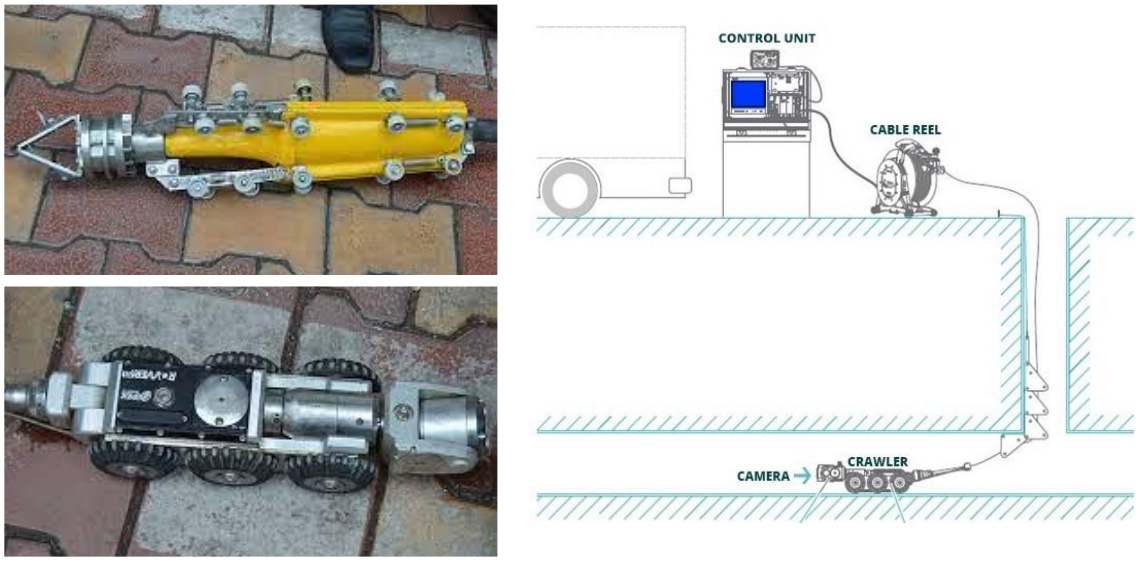

Figure 2. Sewer Crocs for cleaning sewer lines

Observations and Limitations

- A trained person is required to operate the Sewer Croc.
- Separate equipment is required to collect the silt and dispose it at the designated site.
- A jetting machine is required to obtain the best performance from the Sewer Croc.
- It can clear materials such as gunny bags, mattresses, bricks, and roots but cannot clear RCC blocks and rocks.

Existing Case of Use of Proposed Equipment

The Sewer Croc is currently being used by the Hyderabad Municipal Corporation and Vijayawada Municipal Corporation. Hyderabad is renting out this equipment at the rate of Rs 237 per running metre, for cleaning sewer lines of up to 600 mm diameter. The city has reported a satisfactory performance and recommended that the Sewer Croc be used in the other cities as well. Vijayawada, too, has used it on a rental basis for a year and is now planning to procure one.

4.2.2. Hose Guider

The hose guider[3] is used in many European countries to guide the nozzles into the sewer line.

Issues Addressed

The hose guider assists in inserting the nozzle into sewer lines that are placed deeper inside the maintenance holes. It also functions as a protective cover for the hose pipe, thereby reducing the wear and tear of the nozzle pipe and increasing its durability.

Application

In case the depth of the maintenance hole is greater than 15 feet, the hose guider is placed in the maintenance hole to direct the nozzle of the jetting machine. It helps the nozzle pass through the sewer line and reach the area where jetting needs to be carried out.

Requirement of Human Resources, Training, and PPE

No additional human resource is required for operating the hose guider. Moreover, sanitation workers don't need practical training, any new skill, or extra PPE in order to operate it safely.

Figure 3. Hose guide

CapEx and OpEx

Hose pipes used for emptying septic tanks can also be used as a hose guider. There is no additional operational cost associated with it.

Observations and Limitations

There are no limitations posed by using the hose guider.

Existing Case of Use of Proposed Equipment

Currently, Chandigarh Municipal Corporation is using hose guiders to clean the city's sewer lines.

[3] https://www.youtube.com/watch?v=TPHPtyVIJR0

Figure 4. Use of hose guider in Chandigarh Municipal Corporation

4.2.3. Sewer Cleaning Bucket Machine

The sewer cleaning bucket machine consists of two powered winches, with cables in between for desilting sewer lines using a bucket.

Issues Addressed

Blockages inside sewer lines can be prevented through regular desilting using this equipment.

Application

The sewer cleaning bucket machine consists of two motorized winches connected by wires. The winches are positioned over two maintenance holes, to clear a stretch of the sewer line. Sewer rods, or flexible split-bamboo rods, are used to thread the cable through the sewer line, moving it from one winch to the other. The cable from the drum of each winch is fastened on one end of the bucket fitted, so that the machine can pull the bucket in either direction, as required. To clean the sewage, the bucket is dragged into the loosened debris.

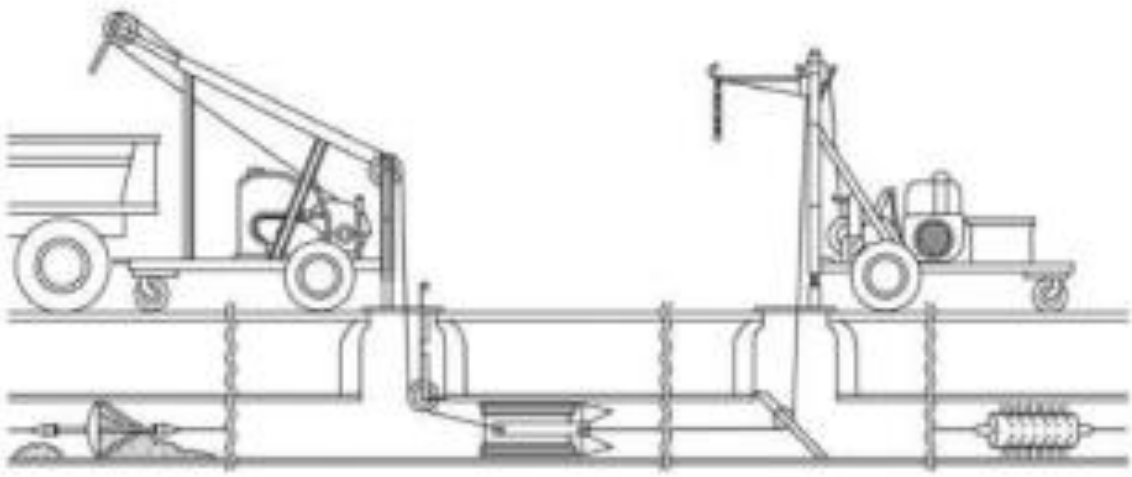

Figure 5. Sewer Cleaning Bucket Machine

Requirement of Human Resources, Training, and PPE

Table 2 summarizes the human resources required for operating the sewer cleaning bucket machine and provides the measures for ensuring worker safety.

Table 2. HR, Training, and PPE requirement for operating sewer cleaning bucket machine

HR requirement	Training Required	PPE Required
• Operator – 2 • Helper – 4	• Operation of the machine • Dos and don'ts for operating the machine • Hazard awareness and mitigation	• **Operator:** Mechanical resistance gloves, ankle-length steel toe shoes, N95 mask and uniform • **Helper:** Gloves, gum boots, N95 mask and uniform

CapEx and OpEx

The capital cost of the equipment starts from around Rs 6–7 lakhs. The O&M cost is proportional to the frequency of usage, and ranges from 5 per cent to 10 per cent of its capital cost per year.

Observations and Limitations

- The sewer cleaning bucket machine can only remove silt, not any other blockages.
- An additional vehicle, such as a tractor trolley, is required for transporting the silt to the designated disposal site.
- The road needs to be at least 3 m wide to operate the equipment.
- The operation is time consuming and requires a large space to place the two winches.
- The walls of the maintenance holes and sewer lines may sustain damage if the sewer cleaning bucket machine is not operated properly. Thus, it is critical to train the workers to use the machine.

Existing Case of Use of Proposed Equipment

The Greater Hyderabad Municipal Corporation currently uses this equipment for regular desilting of sewer lines. They have reported satisfaction with its performance, despite the operation being somewhat time consuming.

4.2.4. Rodding Machine

A rodding machine consists of a steel rod and chassis engine. The engine provides the power to push, pull, and rotate the rod, which can be used to clean and remove obstructions from the sewer lines.

Issues Addressed

The rodding machine is used to clear hardened clogs inside sewer lines and make sewers function smoothly.

Application

A power rodding machine is designed to remove hard chokes, roots of the trees, and other heavy obstructions from sewer lines. It can be used for cleaning sewer lines of up to 600 mm in diameter.

Figure 6. Rodding machine

Requirement of Human Resources, Training, and PPE

Table 3 summarizes the human resources required for operating a rodding machine and provides the measures for ensuring worker safety.

Table 3. HR, Training, and PPE requirement for operating rodding machine

HR requirement	Training Required	PPE Required
• Operator – 1	• Training of operators on the SOP to operate the equipment • Dos and Don'ts during the operation • Hazard identifications and mitigation	• Mechanical resistance gloves, ankle-length steel toe shoes, an N95 mask, and protective glasses

CapEx and OpEx

The cost of a rodding machine ranges from Rs 2 to Rs 4 lakhs. Other costs include the cost of attachments. The O&M cost of the machine depends on factors such as the use of the machine, power requirement, and the salaries of human resources, usually around 5–10 per cent of the capital cost per annum.

Observations and limitations

- The rodding machine cannot be used for plastic or PVC pipes, as it may damage these.
- An additional vehicle is required for transporting the rodding machine.

Existing Case of Use of Proposed Equipment

Many cities in India are using rodding machines, including Cuttack and Bhubaneswar in Odisha. Both have reported positive feedback.

4.2.5. Hydraulic Cover Lifter

A hydraulic cover lifter is used for lifting the covers of maintenance holes or septic tanks.

Issues Addressed

Eliminating ergonomic hazards caused by manual lifting of maintenance hole/septic tank covers by mechanizing the process.

Application

The hydraulic cover lifter is placed over the opening of a maintenance hole or septic tank to engage with the hook of the cover and lift it hydraulically. No special skill is required to operate it. The lifter can be carried completely assembled in a van, or it can be disassembled quickly and easily to fit into smaller spaces.

Requirement of Human Resources, Training, and PPE

Table 4 summarizes the human resources required for operating a hydraulic cover lifter and provides the measures for ensuring worker safety.

Table 4. HR, Training, and PPE requirement for operating hydraulic cover lifter

HR requirement	Training Required	PPE Required
• Operator – 1	• Training of operators on the SOP to operate the equipment • Dos and Don’ts during the operation • Hazard identifications and mitigation	• Mechanical resistance gloves, ankle-length steel toe shoes, an N95 mask, and protective glasses

CapEx and OpEx

The capital cost of the hydraulic cover lifter starts from Rs 70,000 and can go up to Rs 2 lakhs. There is no major operational cost associated with this equipment.

Figure 7. Hydraulic cover lifter

Observations and Limitations

- This equipment can be used if the maintenance holes or septic tanks are covered with a lid. However, in case the cover is sealed with the concrete slab, it cannot be used.

4.3. Suggested Modifications/Additions in Existing Equipment

- The use of a high-pressure jetting and suction machine with a water recycling system can be considered. This machine does not require water refills for carrying out the jetting operation, thus saving time by reducing multiple trips of the machine to a water source. It also ensures that the jetting operation can be carried out for long durations, without interruption, and is not limited by the capacity of the freshwater tank, as is the case with "suction cum jetting cum desilting" machines. This equipment has been extensively used in metro cities, such as Pune and Mumbai, for desilting the sewer line.
- Jetting machines of smaller capacities can be used for accessing narrow lanes. Chandigarh uses Bolero-mounted jetting machines, whereas the Indore Municipal Corporation uses three-wheeler auto-mounted jetting machines, with a tank capacity of 500 litres.

Figure 8. Jetting cum suction machine with a recycler
Source: (Kam Avida, 2022)

Figure 9. Three-wheel auto-mounted jetting machine for accessing narrow areas in Indore Municipal Corporation

Figure 10. Bolero-mounted jetting machine for accessing narrow areas in Chandigarh Municipal Corporation

Other Recommendations

- Preventive maintenance must be adopted to ensure the proper functioning of sanitation facilities and to avoid manual interventions. For example, Indore Municipal Corporation has geo-tagged all maintenance holes and prepared a schedule for their cleaning – at least once a quarter. This has helped the city reduce blockages and eliminate the need for manual cleaning of sewer lines.
- Proper training with practical demonstration is a must for new workers to operate the machine. Refresher training should also be planned for the existing workers, to ensure the machines are operated in a correct manner and to prevent injuries, fatalities, as well as damage to the machine or sanitation infrastructure.
- Service Level Agreements (SLA) must be drafted to ensure that ERSU permission processes are delivered within the stipulated timeframe. In Malaysia, Indah Water Konsortium (IWK) – the agency responsible for the O&M of sewer lines and septic tanks – takes as little as two hours to grant permissions for the manual cleaning (with proper safety gears) of confined spaces.
- To ensure local availability of spare parts for various vehicles and equipment used for the cleaning of sewer lines, the state government should engage local vendors for respective original equipment manufacturers (OEMs) for ease of serviceability. Inventory management can also help address the delays resulting from the unavailability of spare parts.
- An adequate number of traffic management devices should be provided and used while cleaning the sewer lines, to minimize the risk of road accidents during cleaning operations.

5. Cleaning of Maintenance Holes

A sewer is an underground conduit for transporting wastewater – from the properties connected with sewer lines to the treatment unit. Sewers are provided with small, covered openings known as maintenance holes, which allow access to the sewer lines to facilitate inspections, cleaning, and obstruction removal. Desilting is thus an essential part of preventive maintenance, to ensure the proper functioning of the sewer system. This process is usually carried out using a desilting machine.

5.1. Existing Equipment for Cleaning of Maintenance Holes

5.1.1. Desilting Machine

A desilting machine is used for clearing the sludge accumulated in a maintenance hole due to blockages in the sewer lines.

Application

The desilting machine is a chamber cleaning machine designed to be used in maintenance holes. It has a silt-carrying capacity ranging from 0.25 cu. m to 0.5 cu. m. The grabbing capacity of the bucket is 20–50 kg. The silt collected in the grab bucket can be directly emptied into the container mounted on the same vehicle, without the need for rehandling the waste.

Figure 11. Maintenance hole cleaning using a desilting machine

CapEx and OpEx

The machine costs around Rs 7–8 lakhs. The operational cost of the machine depends on several factors, such as the use of the machine, its running distance, and the salaries of human resources. Most manufacturers provide three free services per year, for up to three years.

Adaptability and Effectiveness

The desilting machine is the most financially feasible option for cleaning maintenance holes. However, the machine cannot be used for any other maintenance operation in sanitation.

Field Observations and Challenges

- It was observed that the operators were manually guiding the bucket towards the container. The desilting machine has an inbuilt guiding mechanism, but it was not being used. This shows that the operators lack proper training.
- The desilting machine is unable to clean the materials stuck to the walls of the maintenance hole.
- The hydraulic arm is not flexible and cannot be extended beyond a certain limit, making it difficult to desilt maintenance holes with limited accessibility.

- The spare parts of the machine are not available locally, and can take months to be sourced. This renders the vehicle idle in the interim.

5.1.2. Bandicoot

A Bandicoot is a robotic machine designed for cleaning maintenance holes. The arm of the robot removes the sludge and dumps it into a separate tray. The machine is equipped with a camera to see the blockages and assist in the operation inside the maintenance hole.

Application

Bandicoot is placed over the maintenance holes. Its robotic arm, which has a 360-degree rotating ability, goes inside and lifts the sludge. Bandicoot can be used to desilt 10–15 m deep maintenance holes.

Figure 12. Maintenance hole cleaning using Bandicoot

CapEx and OpEx

The cost of the machine is around Rs 40 lakhs. Its annual operational cost is up to 5–10 per cent of its capital cost.

Adaptability and Effectiveness

Though Bandicoot is a robotic machine and helps in the mechanical cleaning of maintenance holes, it may not be a financially viable option. Options such as desilting machines are more effective for similar operations of cleaning, thus a better investment. Moreover, the machine cannot be used for any other maintenance operation in sanitation.

Field Observations and Challenges

- The Bandicoot is bulky, and a separate vehicle is required to transport it to the required site.
- The machine cannot clean the sludge stuck on the sidewalls of the maintenance hole.
- The grab bucket attached to the machine cannot move in a horizontal direction. Thus, a separate tray is required for collecting the waste extracted from the maintenance hole. It was observed that the following three-stage transport arrangement was required for the final disposal of the sludge removed from the maintenance hole:
  - ⇒ STEP 1: Disposing of the sludge removed from the maintenance hole in a collection tray
  - ⇒ STEP 2: Disposing of waste from the collection tray to the tractor trolley
  - ⇒ STEP 3: Transporting the sludge from the tractor trolley to the designated disposal facility

This creates an added requirement for vehicle/equipment and human resources.

- The legs and the desludging arm of the Bandicoot are not flexible. The arm cannot be moved in a horizontal plane. Thus, to remove the sludge collected by the arm, the cart needs to be manually placed between the maintenance hole opening and the arm. This process makes the transfer of waste difficult and exposes operators to the hazards of handling faecal matter.
- The height of the legs of the Bandicoot cannot be adjusted, and the robot needs a flat terrain to operate. It cannot work on uneven roads.
- Sludge and other waste accumulate on the lens of the camera once it is introduced in the maintenance hole, rendering it useless. The operator has to peep into the maintenance hole to operate it.
- For any technical issues with the Bandicoot and to obtain spare parts for repair, manufacturers based out of Kerala need to be contacted for delivery. This makes repair operations time consuming.
- The workers are directly exposed to the maintenance hole gases while opening the cover.

5.2. Suggested New Equipment for Cleaning of Maintenance Holes

5.2.1. Tricycle Desilting Equipment

The tricycle desilting equipment is used for the cleaning of maintenance holes. This innovative equipment is fabricated locally by the Indore Municipal Corporation, and serves as a preferred alternative to the Bandicoot.

Issues Addressed

The tricycle desilting equipment can reduce dependency on expensive equipment such as the Bandicoot. The use of this equipment can also eliminate the requirement for additional human resources and skilled operators.

Application

Once a maintenance hole cover is lifted, the tricycle desilting equipment can be placed on top of the maintenance hole. It has a grab bucket that collects silt from the maintenance hole and transfers it to a vehicle for transportation to the designated disposal site.

Requirement of Human Resources, Training, and PPE

Table 5 summarizes the human resources required for operating the tricycle desilting equipment and provides the measures for ensuring worker safety.

Table 5. HR, Training, and PPE requirement for operating tricycle desilting equipment

HR requirement	Training Required	PPE Required
• Operator – 1	• Operation of the machine • Dos and Don’ts while operating the machine	• Gloves, ankle-length steel toe shoes, N95 mask and uniform

Figure 13. Tricycle desilting equipment used in Indore Municipal Corporation

CapEx and OpEx

The cost of this equipment is around Rs 40,000. Since it is easy to operate and can be locally fabricated, its operational cost is very low.

Observations and Limitations

An additional vehicle is required for transporting silt removed from the maintenance holes, from one site to another.

Existing Case of Use of Proposed Equipment

Indore Municipal Corporation has manufactured this equipment locally in their workshop. The city is using it for desilting of maintenance holes, replacing the need for Bandicoots and making desilting operations cost-effective.

5.3. Suggested Modifications/Additions in Existing Equipment

- A three-wheeler mounted desilting machine can be more functionally and financially effective than the Bandicoot. This machine costs a quarter of the price of the Bandicoot and requires fewer people to operate it. Further, no additional vehicle is required to transport it to any other location.
- Indore Municipal Corporation is currently using this machine with an extendable arm. It has a manually adjustable telescopic arm with multiple holes, which is fixed with a stud. Similarly, manufacturers in Odisha can be encouraged to develop an expandable arm for the desilting machine, in collaboration with the local manufacturers.
- A combination of desilting, suction, and grabber can also be explored. Since this machine can perform all three operations at the same time, it eliminates the need for additional vehicles and human resources. In Gujarat, this machine has been procured and deployed across more than 15 districts.
- The use of a hydraulic cover lifter can be explored for eliminating possible ergonomic hazards

that workers may face while lifting maintenance hole covers (see Section 4.2.5 for more details).

Figure 14. Modified desilting machine with extendable arm

6. Cleaning of Septic Tanks

Cleaning of septic tanks, also referred to as desludging, is a process of removing septage from septic tanks. It is generally done with the help of vehicles known as "cesspool vehicles".

6.1. Existing Equipment for Cleaning of Septic Tanks

6.1.1. Cesspool Vehicles

Cesspool vehicles are suction-based machines used for cleaning the septage and emptying septic tanks.

Application

Cesspool vehicles can desludge at a depth of 2–3 m. In adverse conditions, some suction trucks can suck sludge from a depth of up to 8 m.

CapEx and OpEx

The capital cost of the machine depends on the capacity of the vehicle; the smallest vacuum truck of 1,500 litres may cost around Rs 15–25 lakhs**.** The operational cost of the machine usually depends on several factors, such as the use of the truck, its running distance, and the salaries of human resources. Most manufacturers provide three free services per year, for up to three years. The spare parts of the machine are easily available from local vendors.

Figure 15. Septic tank desludging operation

Adaptability and Effectiveness

If proper access to the septic tank is available, the cesspool vehicle is the best feasible option for the task of cleaning. Its effectiveness may decrease if the tank is located in an area inaccessible by the truck, or if the sludge is dry. Suction trucks capable of sucking the sludge from a depth of 8 m are also available in the market.

Field Observations and Challenges

- Desludging septic tanks located in narrow lanes and areas of inaccessibility is a major challenge. A common practice for desludging of tanks in such areas is using a series of hose pipes. However, the developed suction pressure is usually inefficient in sucking the sludge.
- Desludging of dry sludge is a major challenge. Most septic tanks constructed in India are oversize, and since demand desludging is practised in India, the sludge often dries up and hardens (depending on the size of the tank). The removal of such dried sludge is difficult using a vacuum truck.
- Although desludging and transportation of the sludge is a mechanized process, accidental spills or contact may occur while detaching the hose pipe and discharging of sludge. The sludge contains harmful microbes, which can result in biological hazards.
- Workers use a rod to stir sludge inside the septic tanks. Improper handling of the rod increases the possibility of contact with faecal matter.
- In some cases, the septic tank openings are sealed and need to be broken for desludging. The workers face ergonomic hazards while manually removing the cover of the septic tank, are prone to physical injuries, and risk exposure to the inside of the septic tank.

6.2. Suggested New Equipment for Cleaning of Septic Tanks

6.2.1. Submersible Pumps

Submersible pumps are the most durable pumps for underwater operations – for moving both solids and liquids. They can withstand the everyday use of processing water, rocks, sand, mud, sludge,

slurry, and other abrasive materials. For narrow lanes, a combination of portable submersible sludge pumps and a transfer mechanism can be used.[4]

Issues Addressed

Desludging of households in narrow lanes, where accessibility is limited for machines such as cesspool vehicles.

Application

Submersible sludge pumps can be used to remove solids of diameter up to 5 cm.

a. Power: 4–9 HP
b. Flow: 230–420 GPM

Submersible slurry pumps can pump the most abrasive media with substantial amounts of solid content, of sizes ranging from 2 to 20 cm. These pumps can be used for everything from dewatering to dredging. They need to be powered electrically or hydraulically.

a. Power: 5–102 HP
b. Flow: 240–2,100 GPM

Figure 16. Submersible Pumps
Source: https://www.daepumps.com

CapEx and OpEx Requirements

A 5 HP submersible pump may cost around Rs 30,000–40,000. The cost may increase depending on the specification of the pump. The major operational cost involved is the salary of the worker operating the pump. Some manufacturers may provide a warranty of 12 months.

Requirement of Human Resources, Training, and PPE

Table 6 summarizes the human resources required for operating submersible sludge pumps and provides the measures for ensuring worker safety.

[4] Operation of submersible pump: https://www.youtube.com/watch?v=1_ZFVT7TNmQ

Table 6. HR, Training, and PPE requirement for operating submersible pumps

HR requirement	Training Required	PPE Required
• Operator – 1 • Helper – 2 • Trailer operator – – 2	• Hazard identification and mitigation • Operational work procedure • Handling and transportation of waste	• Mechanical resistance gloves, ankle-length steel toe shoes, N95 masks, protective pants, and full-sleeve protective shirts

Observations and Limitations

- A transport mechanism is required for transporting the sludge. This can be done using a desludging or transport vehicle.
- Since this is a makeshift solution to the problem of lack of accessibility for desludging vehicles in congested areas, the speed of operation is slower compared to conventional methods. Thus, while it ensures mechanization, the efficiency is low.
- The assembly and setting up of the submersible pump have to be done as per site conditions. This requires additional HR to ensure proper safety during operation.
- There is a high possibility of spillage and accidental contact with the waste if the operation is not conducted carefully.

Existing Case of Use of Proposed Equipment

Desludging septic tanks using pumps is a common practice internationally, especially in regions such as Poland, Brazil, USA, Peru, and Mexico. Its effectiveness in the Indian context is yet to be tested.

6.2.2. HomoSEP

HomoSEP is a robot developed indigenously by the Indian Institute of Technology–Madras (IIT–M) for cleaning septic tanks.

Issues Addressed

This robot is useful for cleaning sludge that has hardened and/or thickened due to the non-emptying of septic tanks for a long period of time.

Application

The HomoSEP can be used to homogenize the hard sludge. It has an inverted umbrella-like structure with a shaft attached to blades that can open when introduced into a septic tank. The homogenized sludge is then sucked out with the help of a vacuum pump mounted on the same machine. The effectiveness of HomoSEP is currently being tested in Tamil Nadu. The robot can be operated by trained sanitation workers with appropriate guidance.

Figure 17. HomoSEP
Source: IIT Madras

Requirement of Human Resources, Training, and PPE

Table 7 summarizes the human resources required for operating the HomoSEP and provides the measures for ensuring worker safety.

Table 7. HR, Training, and PPE requirement for operating the HomoSEP

HR requirement	Training Required	PPE Required
• Operator – 1 • Helper – 1	• Training of operators on the SOP to operate the equipment • Dos and Don'ts during the operation • Hazard identifications and mitigation	• **Operator:** Mechanical resistance gloves, ankle-length steel toe shoes, N95 mask, and uniform • **Helper:** Gloves, gum boots, N95 mask, and uniform

CapEx and OpEx

Since the HomoSEP is currently being pilot tested, its exact cost is yet to be determined. It is estimated to be priced around Rs 30–32 lakhs.

Observations and Limitations

- Narrow areas cannot be served using the HomoSEP, as it can only be operated on roads that are at least 3–4 m wide.

Existing Case of Use of Proposed Equipment

Currently, two HomoSEP units have been distributed in Tamil Nadu – to self-help groups led by two women whose husbands died during sanitation work. Eight more HomoSEP units are set to be deployed in the state. Currently, limitations and barriers remain unknown.

7. Cleaning of Large Open Drains

In Odisha, different cities have drains of different sizes. The open drains can be categorized into *large open drains* and *small open drains*. Drains that are more than 2 m in width and depth are large open drains. These drains can be lined or unlined.

7.1. Existing Equipment for Cleaning of Large Open Drains

7.1.1. Backhoe Loader

A backhoe loader is a mechanical excavator machine, with a shovel at the front and a digging arm at the rear, and is used to desilt large drains in cities and towns. It usually has an arm span of 3.7 m and can be operated in drains up to 4 m deep. Figure 18 shows the drain-cleaning operation using a backhoe leader with the help of a tractor trolley. The removed material from the drain is then transported to the designated disposal site.

CapEx and OpEx

The capital cost of procuring a backhoe loader starts from Rs 8 lakhs, and it increases with the type of specifications and additional attachments required. The OpEx cost of the machine depends on factors such as the use of the machine, its running distance, and the salaries of human resources. Most manufacturers provide three free services per year, for up to three years.

Adaptability and Effectiveness

The backhoe ladder can perform the cleaning and maintenance operation of main drains satisfactorily. However, the effectiveness of the machine depends on accessibility to the drain, the terrain at the site location, and the operation procedure followed by the operator. Thus, it cannot be used for drains located in marshy and hilly areas. Provided ample space for movement and terrains with less gradient, it is the most effective and financially feasible solution.

Figure 18. Main drain cleaning operation

Field Observations and Challenges

- The backhoe loader can only desilt the drain. A trailer is required for the transportation of waste.
- The transportation process can result in waste spilling on the road, especially if the trolley is not properly fabricated. Since the waste contains microbes, such spillage exposes passers-by to hazardous material.
- The operators do not ground the stabilizer legs before operating, which increases the

chances of accidents if the driving arm of the backhoe loader is accidentally moved. The likelihood of such accidents increases when the operator is not trained adequately and does not adhere to the SOP.

- The reach of the digging arm of a backhoe loader is limited. Thus, it is not possible to clean drains under culverts and bridges, in areas with limited mobility, and in marshy areas.
- The machine cannot properly collect floating material, such as glass bottles.
- A large space is required for overall operation. Based on the dimensions of a backhoe loader, an area of more than 15 sq. m (plus the space for its movement) is required for the operation. Improper alignment of the trailer or the backhoe loader can contribute to the requirement for more space.
- Desilting in narrow lanes cannot be done using this equipment.
- Traffic control devices are not used at the time of operations.

7.2. Suggested New Equipment for Cleaning of Large Open Drains

7.2.1. Nala Cleaners

A nala cleaner is an alternative for the backhoe loader with a trailer. The nala cleaner has a container mounted on the same chassis that facilitates the transport of sludge from the site. Thus, no separate vehicle is required.

Issues Addressed

Nala cleaners eschew the need for an additional vehicle, such as a tractor trailer, or more human resources.

Application

The nala cleaners can clean drains up to 6 feet wide and 6 feet deep. Two varieties are available in the market: *a nala cleaner with a backhoe* and a *nala cleaner with an arm*.

Requirement of Human Resources, Training, and PPE

Table 8 summarizes the human resources required for operating nala cleaners and provides the measures for ensuring worker safety.

Table 8. HR, Training, and PPE requirement for operating Nala cleaner

HR requirement	Training Required	PPE Required
• Operator – 1 • Helper – 1	• Operation of the machine Dos and Don’ts during operations • Hazard awareness and mitigation	• **Operator:** Mechanical resistance gloves, ankle-length steel toe shoes, N95 mask, and uniform • **Helper:** Gloves, gum boots, N95 mask, and uniform

CapEx and OpEx

The cost of a nala cleaner ranges from Rs 9 lakhs to 18 lakhs depending on the specifications of the vehicle. The operational cost varies based on the usage of the vehicle.

Figure 19. Nala cleaner

Observations and Limitations

- The arm with the bucket cannot rotate to the other side of the machine, which can be limiting.
- There is a risk of spillage from the bucket. A porous design can be adopted, so that the liquid waste gets removed. However, some spilling may still occur if the operator is not trained properly on how to operate the machine.
- The trailer needs regular maintenance to avoid spills during transportation.
- Drains with a lot of plant growth and those in high-gradient terrains cannot be cleaned using the nala cleaner.

Existing Case of Use of Proposed Equipment

Nala cleaners are being used in Berhampur in Odisha, and other cities such as Pune and Mumbai, for cleaning large drains.

7.2.2. All-Terrain Excavators

An all-terrain excavator[5] is a single-operator machine based on a sophisticated high-tech chassis and the patented boom (Menzi muck, 2022). The hydraulic cylinders enable the excavators to adapt their wheels and support any terrain. Fixed tilting edges on the excavators can be adjusted depending on the task. Compared to conventional excavators, the all-terrain excavator produces stronger lifting and ripping forces.

Issues Addressed

Issues faced in cleaning due to sloppy terrain or areas inaccessible by the backhoe of a machine can be resolved using all-terrain excavators.

Application

These excavators can be used to dredge areas that cannot be accessed using normal excavators or nala cleaners – for instance, marshy land, places under culverts or bridges, or sloppy terrain area. It can also be used for the desilting of canals and shallow water bodies. Attachments such as

[5] http://www.kamavida.com/products/KAMMATE

hopper/grab, backhoe attachment, and sorting grab are available and can be used with the excavator, depending on the requirement.

Figure 20. All-terrain excavators

Requirement of Human Resources, Training, and PPE

Table 9 summarizes the human resources required for operating all-terrain excavators and provides the measures for ensuring worker safety.

Table 9. HR, Training, and PPE requirement for operating all-terrain excavators

HR requirement	Training Required	PPE Required
• Operator - 1	• Operation on the Machine • Training on SOP • Hazard awareness and mitigation	No specific PPE is required for the operator.

CapEx and OpEx

The cost of the machine is around Rs 2.5 corers. Considering the operational needs of the machine, its O&M cost would be comparatively higher, and will vary based on the frequency of usage.

Observations and Limitations

- All-terrain excavators can only be used to desilt the drain. A trailer is required to transport the removed waste.
- Since the excavator offers low on-road speed, alternate transportation may be required for distant locations.
- A highly trained professional is required for operating the all-terrain excavator. If the operator is not properly trained, the machine can cause damage to the walls of drains or other structures during operation.
- The machine is expensive and not manufactured in India. Thus, the availability of spare parts can be a problem, leading to hurdles and delays in maintenance.

Existing Case of Use of Proposed Equipment

While the MoHUA has listed this equipment for the desilting of large open drains, there is no known use case of the all-terrain excavator in India's sanitation sector.[6] It is being sold in India, and based on discussions with the manufacturer, it has been recommended for use in the sanitation sector. Before procurement, a demo can be requested, to confirm whether it will be useful in the local context. It is recommended to try out other available equipment first, and only consider the all-terrain excavator if those do not perform satisfactorily.

7.3. Suggested Modifications/Additions in Existing Equipment

- The tractor trolleys must be fabricated properly, to avoid waste littering and spillage during the transportation of the waste removed from the drains.
- A minimum of two sets of traffic control devices should be carried and used at the workplace, to ensure the safety of operators and passers-by.
- Arm or backhoe attachments with a porous design[7] can be used to drain out the water before loading the waste into the trailer. While such attachments are already available in the market, they can also be locally manufactured.
- The existing bucket can be replaced with a grab bucket, which can collect floating materials.
- A long-handled strainer can be used to remove floating material from the drains.

8. Cleaning of Narrow Open Drains

Drains with a depth of less than 2 m can be classified as narrow drains. These are usually meant to carry stormwater, but due to the unmonitored disposal of solid waste and wastewater, they require regular maintenance to avoid blockages. The cleaning of narrow drains is usually carried out using mini excavators or hand shovels. The useability of the equipment or tool depends largely on accessibility to the drains.

8.1. Existing Equipment or Tools for Cleaning of Narrow Open Drains

a) Mini Excavators

A mini excavator, also known as a compact excavator, is a tracked or wheeled vehicle used to clean narrow open drains.

Application

A mini excavator can rotate 360 degrees on its axis, which facilitates easy cleaning of drains. It is suited to be used in narrow lanes, for desilting open drains up to 2 m wide and 1.5 m deep.

CapEx and OpEx

The average cost of a mini excavator is around Rs 8 lakhs, while the ones with advanced and modified features can be priced up to Rs 20 lakhs. The operational cost of the machine usually depends on factors such as the use of the machine, its running distance, and the salaries of human resources. Most manufacturers provide three free services per year, for up to three years.

[6] Countries such as Switzerland are using the excavators for maintenance of the drains.
[7] Design that incorporates holes in the equipment to allow water to drain out.

Figure 21. Drain cleaning operation of a mini excavator using a tractor trolley

Adaptability and Effectiveness

While the compact excavator can perform the maintenance operation satisfactorily, the effectiveness of the cleaning mechanism is hampered due to spills that occur while transporting the waste to the trailer. The excavators can also be used for slab removal, to clean the closed drains. A mini excavator can serve as one of the best solutions for cleaning narrow drains and closed drains, if combined with proper slab-removal, waste-handling, and disposal mechanisms.

Field Observation and Challenge

- The excavators can only remove silt from the drains. A vehicle, such as a tractor trolley, is required to transport the silt to the disposal site.
- While transferring the waste to the tractor trolley, spillage can occur. It was observed that the spilled waste was neither cleared immediately nor covered with disinfectant. Since the waste contains microbes, leaving it out to dry in the open can affect the passers-by until it is removed.
- During the operation, the side walls of sewer lines may get damaged due to a collision with the backhoe of the excavator, if operated by untrained human resources.
- While the dimensions of the excavator are small, it can only be operated on roads with a minimum width of 6 feet.

b) Hand Grabbers and Shovels

Hand grabbers usually refer to manually operated dredgers used to scrape waste from narrow drains or maintenance holes.

Application

Hand grabbers can be used to manually collect silt and other solids from open drains and maintenance holes. It can be used in drains up to 3 m deep. For shallow drains, shovels can be used.

Figure 22. Drain cleaning operation using manually operated grabbers and shovels

CapEx and OpEx

The cost of a manual grabber ranges from Rs 15,000 to Rs 30,000, depending on its size and material. Manually operated grabbers have little to no maintenance/repair costs associated with them. The OpEx includes the salaries of the operators.

Adaptability and Effectiveness

Both manual grabbers and shovels are easy to use for desilting open drains, especially narrow ones. Operating these does not require any specialized skillset.

Field Observation and Challenge

- While cleaning narrow drains, the workers have to enter the drains to remove silt and floating material. This is time and labour-intensive and exposes the workers to several hazardous micro-organisms and chemicals. Additionally, the workers need to bend to use the tool, which causes ergonomic discomfort and can lead to musculoskeletal pain.
- The hand grabber is heavy and cannot be used for long durations. It can also cause fatigue and ergonomic pain to the sanitation workers.
- It is difficult to clean drains that are sealed and covered with concrete slabs.
- The removed waste is often left to dry on the streets, exposing citizens to hazardous waste.

8.2. Suggested Modifications/ Additions in Existing Equipment

- The tractor trolley for transporting waste should be properly fabricated and leakproof, so that the waste does not spill over on the roads during transportation.
- Arm or backhoe attachments with a porous design can be used to drain out water before loading the waste into the trailer. While such attachments are already available in the market, they can also be locally manufactured.
- A handcart or a wheelbarrow should be used in narrow lanes to transport the waste removed

from the drains if the place cannot be accessible by the trailer. The waste should not be left to sundry.

- A long-handled strainer can be used to remove floating materials from the drains.
- The weight of the hand grabbers can be reduced by using stainless steel material for fabrication. A local fabricator was contacted to detail the technical specifications. WATCO may consider working with the local fabricator in Cuttack to fabricate such hand grabbers and pilot their use in the city (see Annexure 1 for quotation).

9. Cleaning of Covered Drains

Covered drains are drains covered with concrete slabs, which are difficult to clean. The slabs are of various sizes and need to be removed to commence the cleaning and maintenance operation. Currently, these covers are lifted manually in most cities. However, slab removal attachments can be used for the operation.

9.1. Existing Equipment for Cleaning of Covered Drains

a) Skid-Steer Loader with Backhoe and Slab-Removal Attachment

A skid-steer loader is a small engine-powered machine with lift arms that can attach to a wide variety of buckets and other labour-saving tools or attachments.

Application

A skid-steer loader with a backhoe attachment is used for desilting the drain. The loader functions as a mini-excavator and can be used to desilt in small- and medium-sized lanes. Using the slab-removal attachment, the skid-steer loader can clean closed drains.

Figure 23 shows a skid-steer loader with different attachments.

Figure 23. Drain cleaning operation using skid-steer loader

CapEx and OpEx

The average cost of a skid-steer loader varies from Rs 10 to 16 lakhs; various attachments associated with it have additional costs. The operational cost of the machine usually depends on factors such as the use of the machine, its running distance, and the salaries of the workers involved. Most manufacturers provide three free services per year, for up to three years.

Adaptability and Effectiveness

The maintenance of closed drains can be performed effectively using a skid-steer loader with attachments. However, the operation can sometimes result in spills and structural damage. The adaptability of the skid-steer loader depends on the reach of the backhoe arm. On average, these loaders can clean narrow drains satisfactorily, provided the availability of clear access to narrow drains.

Field Observations and Challenges

- The skid-steer loader with a backhoe only removes silt from the drains. A vehicle, such as a tractor trolley, is required to transport the waste removed from the drains to the disposal site.
- While transferring the waste to the tractor trolley, spillage can occur. It was observed that the spilled waste is neither cleared immediately not covered by disinfectant. Since this waste contains microbes, it can affect the passers-by until it is removed.
- The backhoe attachment of the skid-steer loader is inefficient in removing materials such as glass, paper, and plastic from the drains. The worker has to enter the drain to lift such floating material manually and load it into the backhoe.
- Using the slab-removal attachment affects the durability of the slab covers, as it causes wear and tear during the operation. The edges of the covers get damaged during their removal and re-placement on the drains.
- The skid-steer loader is unable to remove large slabs.
- Traffic control devices are not used while operating on busy roads, which may lead to accidents or the waste splashing on passers-by.

9.2. Suggested Modifications/Additions in Existing Equipment

- The use of a hydraulic cover lifter can be explored for removing or placing slabs, to eliminate ergonomic hazards that workers face while lifting the maintenance hole covers (see Section 4.2.5 for more details).
- The tractor trolley should be fabricated properly to avoid the spillage of waste on the road during transportation.
- Arm or backhoe attachments with a porous design can be used to drain out water before loading the silt into the trailer. These attachments can be locally manufactured, in case they are unavailable in the local markets.
- Handcarts or wheelbarrows should be used in narrow lanes to transport the waste removed from the drains, if the site is not accessible by the trailer. The waste should not be left out in the open.
- A long-handled strainer should be used to remove floating materials from the drains to avoid manual entry.

Other Recommendations

- The spilled waste must be cleared immediately after completion of the work.
- To ensure the availability of spare parts in the local markets for various vehicles and equipment used for cleaning drains, the state government must engage local vendors for respective OEMs for ease of serviceability. Inventory management can also help address the delays resulting from the unavailability of spare parts.

- An adequate number of traffic management devices should be provided and used while cleaning the drains, to minimize the risk of road accidents during operations.

10. Way Forward

The machines currently available for cleaning sanitation appurtenances perform regular operations in a satisfactory manner. However, some additional equipment, such as a hydraulic cover lifter for removing maintenance hole covers, hose guiders, or Sewer Crocs, can be procured to make certain operations more efficient. A discussion with local vendors or manufacturers can also be initiated to customize the existing equipment according to the requirements identified in the study.

One urgent need that has emerged is the training of workers in operating the vehicles and equipment. Currently, they lack practical training and are not fully aware of the use of the machines, which exposes them to various health hazards and makes them vulnerable to diseases and physical injuries. Regular training of all workers engaged in the operation of the machines is crucial. Furthermore, knowledge must be imparted on the appropriate use of PPE, and supervisors must ensure strict compliance.

It is important to note that the problems observed in this study are not limited to technical issues and are often a combination of infrastructural and administrative problems. These cannot be resolved simply by introducing mechanized solutions. For instance, in Puri, a 2-km patch of drainage is completely covered by road and concrete slabs, making it difficult for workers to clear clogs in the drains. In Bhubaneswar, the operators face challenges in accessing the maintenance holes located in the conservancy areas, which have very narrow lanes. These problems can only be addressed through stringent enforcement of norms and regulations, which have no financially viable mechanized alternative.

The following section is aimed at helping decision-makers choose between several options, factoring in the suitability and efficiency of a machine for the intended operation.

10.1. Decision Matrix: Drain Cleaning

The efficiency of the machine to perform the given work satisfactorily is one of the most important factors contributing to the procurement of equipment. The following matrix discusses the useability of various drain cleaning equipment under conditions that can be encountered during the maintenance work by the city.

Table 10. Decision matrix: Drain cleaning

Equipment	Suitability Under Various Conditions				
	Closed drains with width and depth up to 1.5 m	**Open drains with drains up to 3.5 m wide and 4 m deep, with space for machine operation**	**Open drains of depth and width more than 4 m**	**Open drains in marshy areas, hilly terrains**	**Desilting under bridges, culverts, etc.**
Backhoe Loader	×	√*	×	×	×
Skid Steer Loader with Attachments	√	√*	×	×	×

Equipment	Suitability Under Various Conditions				
	Closed drains with width and depth up to 1.5 m	**Open drains with drains up to 3.5 m wide and 4 m deep, with space for machine operation**	**Open drains of depth and width more than 4 m**	**Open drains in marshy areas, hilly terrains**	**Desilting under bridges, culverts, etc.**
Mini-Excavators	√	√	×	×	×
Nala Cleaners	×	√	×	×	×
All-Terrain Excavators	×	√*	√	√	√
Hand-Operated Grabbers	√*	×	×	×	×

Symbol	Description
√	Indicates that the application is most suited for the given operation.
√*	Indicates that the machine can perform the work satisfactorily, but some hazards or limitations are associated with the equipment, which have been detailed out in respective sections.
×	Indicates that the above operation cannot be performed using the given equipment.

10.2. Decision Matrix: Sewer Cleaning

The efficiency of a machine in performing a certain task is one the most important factors when considering procurement. The following matrix shows the applicability of various sewer cleaning apparatuses under typical situations.

Table 11. Decision matrix: Sewer cleaning

Equipment/ Machine	Dredging of maintenance hole (up to 8 m)	Dredging of maintenance hole (10 to 15 m)	Desilting sewer lines	Clearing blockages from sewer line
Jetting Cum Suction Machine	×	×	√	√*
Desilting Machine	√	√*	×	×
Bandicoot	√*	√*	×	×
Sewer Croc	×	×	√	√*
Jetting Cum Suction Machine with a Recycling Capacity	×	×	√	√*
Rodding Machine	×	×	√*	√
Sewer Cleaning Bucket Machine	×	×	√	×

Symbol	Description
√	Indicates that the application is most suited for the given operation.
√*	Indicates that the machine can perform the work satisfactorily, but some hazards or limitations are associated with the equipment, which have been detailed out in respective sections.
×	Indicates that the operation cannot be performed using the given equipment.

10.3. Decision-Making for CapEx and OpEx of Vehicles and Equipment

Tables 12 and 13 compare the capital cost and O&M cost of the vehicles and equipment that can be used in the cleaning of sanitation systems. Used in conjunction with the decision matrix given above, these tables can help urban local bodies (ULBs) select appropriate vehicles and equipment, based on the funding available for the procurement of machines and their maintenance.

Table 12. Comparison of CapEx and OpEx for the vehicles and equipment used in drain cleaning

Drain Cleaning Operation		
Equipment	**CapEx**	**OpEx**
Backhoe Loader	++	+++
Nala Cleaner	++	++
All-Terrain Excavator	++++	++++
Mini Excavator	+++	++
Hand Grabbers	+	+
Skid Steer Loader with Attachments	+++	+++

Table 13. Comparison of CapEx and OpEx for the vehicles and equipment used in sewer cleaning

Sewer Cleaning Operation		
Equipment	**CapEx**	**OpEx**
Jetting Cum Suction Machine	+++	++
Sewer Crocs with Inspection Cameras	++	+++
Sewer Cleaning Bucket Machine	+	+++
Rodding Machine	+	+

Note: The '+' sign mentioned in the tables above is for qualitative comparison of the CapEx and OpEx costs. The number of + signs does not signify the proportionality of the cost. The more '+', the higher the CapEx and OpEx.

10.4. Infrastructure and Administrative Issues with No Feasible Engineering Solution

Table 14 highlights the observed issues that have limited feasible engineering solutions. The problems are experienced due to administrative or infrastructural issues. These are generally city-specific and may not hold for many cities.

Table 14. Issues with limited feasible engineering solutions

No.	Observation	Comments
1	Several maintenance holes in Bhubaneswar are located in conservancy lanes, which have limited accessibility. Thus, mechanized cleaning is a challenge.	*This is an infrastructural mismanagement issue.* The smallest machine designed to operate in narrow lanes needs a minimum width of 5 feet to operate. An alternate option is the use of submersible pumps; however, their feasibility (both operational and financial) remains indeterminate.
2	Blockages are related to the presence of foreign material such as sand, mattress, or gunny bags in the drains and sewers.	*This issue is generally related to citizen behaviour.* The best way to mitigate it is by implementing preventive maintenance of the facilities and awareness campaigns.
3	A 2-km patch was observed in Puri where the drain was completely covered. The operators faced issues in the cleaning of the patch. Solid waste was also dumped in these drains, leading to blockages or flooding.	*This is an infrastructural and behavioural issue.* Finding a financially feasible mechanized solution for it will not be possible. Efforts to bring behaviour change amongst citizens is required to prevent illegal dumping of waste in sanitation infrastructure.

Annexure

Annexure 1: Quotation of long-handled hand-operated grabber

Manish Prasad- 9437163185
9338575873

M/s. SUSHAMA STEELS

Manufacturer of :-Cable Tray & Accessories, Earthing Materials (Flat, Pipe, Plate, Rod) Foundation Bolt,H.T & L.T Stay Set,EHV Substation, Clamp, Connectors & etc.
Deals In :- Chemical Earthing, Hot dip Galvanized items, Stainless steel pipe, plate, flat & General Order Supplier.

QUOTATION

To
Mr. Soumya Mohanty,
CMC, Cuttack

Sl.No.	Item	Unit	Rate
1.	Hand Grabber (304 Grade)	Set	Rs. 26500/-

Terms & Conditions (22.06.2022)

1. The above mentioned rates are F.O.R our Factory at Jagatpur.
2. Transportation will be on your side.
3. Payment 100% Advance with P.O.
4. 18% GST will be charged extra.
5. Delivery within 10 to 15 days from the Purchase Order.

M/s. SUSHAMA STEELS
Manish Prasad
Proprietor

Head Office : College Square, Cuttack -753003 (Odisha)
E mail :-sushamasteels@yahoo.com /manishk82@yahoo.com

References

Kam Avida. (2022, Aug). *Kambi Recycler*. Retrieved from Kam Avida: http://www.kamavida.com/products/kambi-recycler-on-hcv

Menzi muck. (2022). *Menzi Muck walking excavators*. Retrieved from Menzi Muck : https://www.menzimuck.com/en/product-groups/menzi-muck-walking-excavators/

Ministry of Housing and Urban Affairs. (2016). *SEWER, FAECAL SEPTAGE AND DRAIN CLEANING EQUIPMENT MANUFACTURED IN INDIA.* New Delhi: Ministry of Housing and Urban Affairs.

Urban Management Centre
A-202, GCP Business Centre
Opposite Navrangpura Fire Station,
Navrangpura, Ahmedabad – 380009; Gujarat
T: +91 79 26400306; E: info@umcasia.org
W: https://umcasia.org/

Saniverse Environmental Solutions
Flat No. 1, 24, Prashant Nagar, Lokamanya Nagar,
Navi Peth, Sadashiv Peth,
Pune – 411030; Maharashtra
T: +91 9423018150; E: sales@saniverse.com
W: http://saniverse.in/index.html